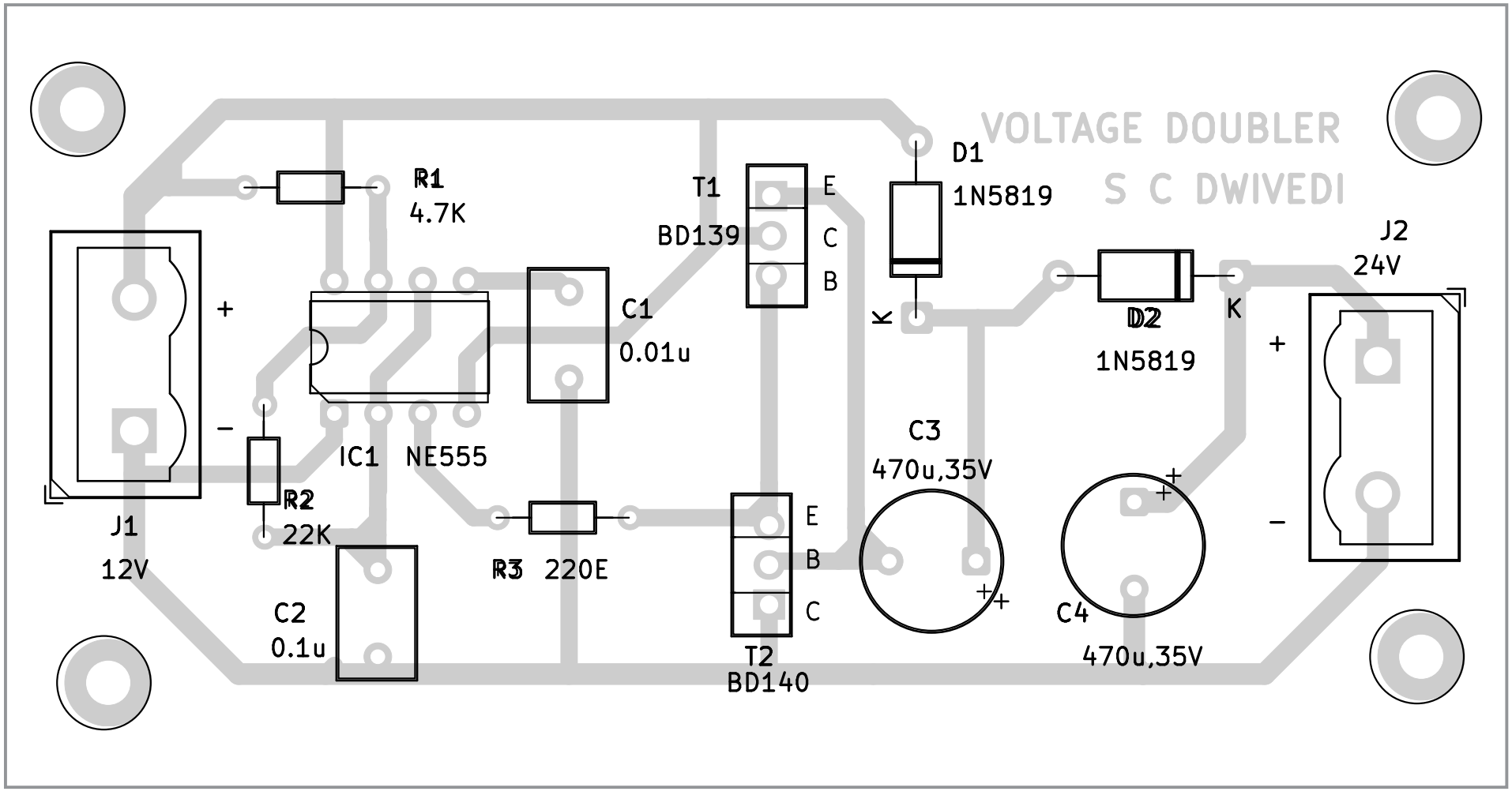

Fig. 4: Components side layout